UNIVERSITY OF CAMBRIDGE INTERNATIONAL EXAMINATIONS
International General Certificate of Secondary Education

CANDIDATE NAME	
CENTRE NUMBER	
CANDIDATE NUMBER	

PHYSICS **0625/23**

Paper 2 Core **October/November 2013**

1 hour 15 minutes

Candidates answer on the Question Paper.

No Additional Materials are required.

READ THESE INSTRUCTIONS FIRST

Write your Centre number, candidate number and name on all the work you hand in.
Write in dark blue or black pen.
You may use a pencil for any diagrams or graphs.
Do not use staples, paper clips, highlighters, glue or correction fluid.
DO **NOT** WRITE IN ANY BARCODES.

Answer **all** questions.
Electronic calculators may be used.
You may lose marks if you do not show your working or if you do not use appropriate units.
Take the weight of 1 kg to be 10 N (i.e. acceleration of free fall = 10 m / s^2).

At the end of the examination, fasten all your work securely together.
The number of marks is given in brackets [ ] at the end of each question or part question.

This document consists of **16** printed pages

DC (SLM/SW) 64841/5
© UCLES 2013

UNIVERSITY of CAMBRIDGE International Examinations

[Turn over

www.root19.com +91 - 9969 353 391

For Examiner's Use

1 A ruler is used to measure the length of a piece of cotton, as shown in Fig. 1.1.

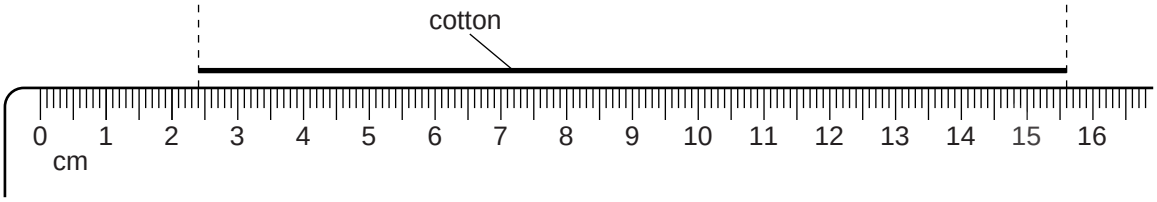

Fig. 1.1 (not actual size)

(a) Use the ruler in Fig. 1.1 to find the length of the piece of cotton.

length = ... cm [2]

(b) The left-hand end of the cotton is moved to the 1.0 cm mark on the ruler.

On Fig. 1.1, mark clearly and carefully, with an arrow, where the **right-hand** end will reach on the ruler. [1]

(c) The piece of cotton is wound around a wooden rod.

The rod has a square cross-section. The cotton goes around the rod exactly 3 times, as shown in Fig. 1.2.

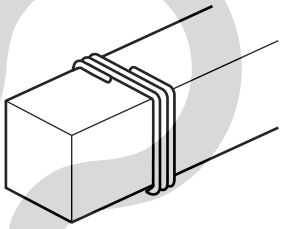

Fig. 1.2

Calculate the thickness of the square wooden rod.

thickness = ... cm [3]

[Total: 6]

© UCLES 2013
www.root19.com

+91 - 9969 353 391

For Examiner's Use

2 Fig. 2.1 shows two athletes training for a race.

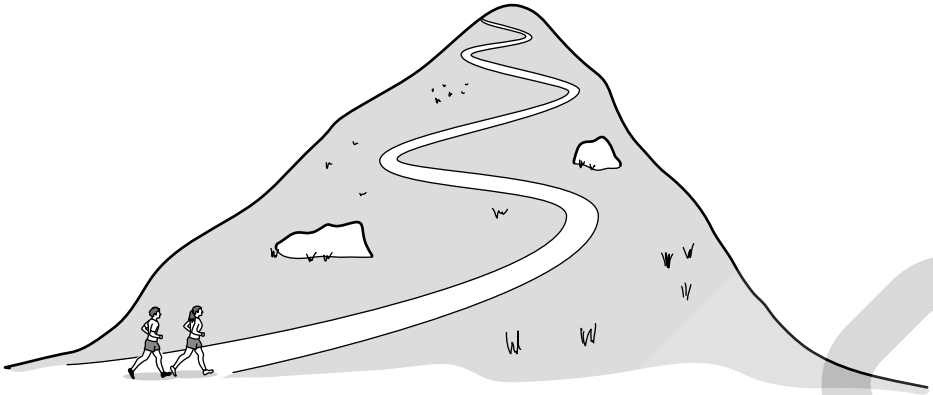

Fig. 2.1

They run up a hill at steady speed.

(a) During the run up the hill,

(i) which form of energy decreases,

.....

(ii) which form of energy increases?

.....
[2]

(b) State the three quantities that need to be known in order to calculate the useful power of one of the athletes.

1. .....

2. .....

3. .....
[2]

(c) The two athletes run side-by-side all the way to the top of the hill, but one athlete develops more useful power than the other.

Suggest a reason for this difference.

.....

..... [1]

[Total: 5]

© UCLES 2013
www.root19.com

+91 - 9969 353 301

For Examiner's Use

3 An explosion at **X** in a quarry is heard by a boy at **Y** and a girl at **Z**. Their relative positions are shown in Fig. 3.1.

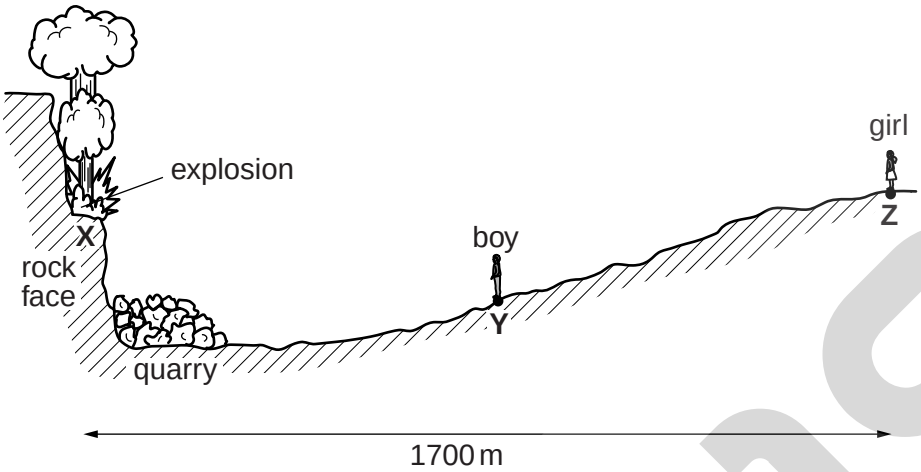

Fig. 3.1 (not to scale)

(a) The girl hears the explosion 5.0 s after she sees the explosion happening.

(i) Explain why there is a delay between seeing and hearing the explosion.

.....

.....

..... [1]

(ii) The girl is standing 1700 m from the explosion site **X**.

Calculate the speed of sound.

speed of sound = ... [4]

© UCLES 2013
www.root19.com

+91 - 9969 353 391

For Examiner's Use

(b) The boy is standing at **Y**, between the explosion site and the girl.

(i) When does he hear the explosion? Tick one box.

immediately it happens ☐

before the girl ☐

at the same time as the girl ☐

later than the girl ☐ [1]

(ii) How does the sound heard by the boy compare with the sound heard by the girl?

Tick one box.

The sound heard by the boy is quieter. ☐

The sounds are equally loud. ☐

The sound heard by the boy is louder. ☐ [1]

[Total: 7]

© UCLES 2013

www.root19.com +91 - 9969 353 301

For Examiner's Use

4 Fig. 4.1 shows a common laboratory instrument.

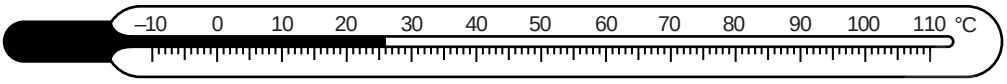

Fig. 4.1

(a) State the name of this instrument.

.....[1]

(b) What does this instrument measure?

.....[1]

(c) Suggest the liquid that this instrument contains.

.....[1]

(d) What must be done in order to make the instrument give a zero reading?

.....

.....

.....

.....

.....[2]

(e) What happens within the instrument to make it give a reading larger than zero?

.....

.....[1]

[Total: 6]

© UCLES 2013
www.root19.com

+91 - 9969 353 391

For Examiner's Use

5 **(a)** Fig. 5.1 shows a small object in front of a vertical plane mirror.

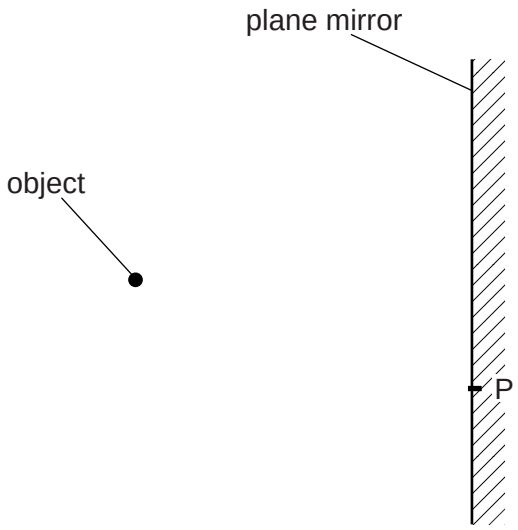

Fig. 5.1

On Fig. 5.1,

(i) mark carefully with a clear cross, labelled I, where the image of the object is located, [2]

(ii) draw the path of a ray from the object to point P on the mirror, and its path after the ray is incident on the mirror, [2]

(iii) mark clearly the angle of incidence *i* and the angle of reflection *r* at P. [2]

(b) When you look into a mirror, you see an image of your face.

State two characteristics of the image you see.

1. .....

2. .....
[2]

(c) If you look from a brightly-lit room into a **thick** glass window when it is dark outside, you can see two images of your face.

Suggest why there are two images.

.....

.....[1]

[Total: 9]

© UCLES 2013
www.root19.com

+91 - 9969 353 301

For Examiner's Use

6 Fig. 6.1 shows two light, uncharged balls A and B suspended next to each other on vertical, insulating threads.

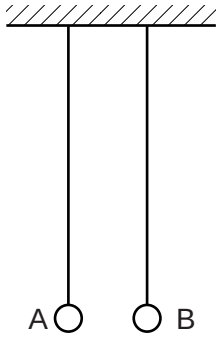

Fig. 6.1

(a) A and B are each given a positive charge.

(i) How will the two threads appear? Tick one box.

both still vertical ☐

further apart at the bottom ☐

closer together at the bottom ☐

(ii) Explain your answer to **(a)(i)**.

.....

.....

[2]

(b) The charge on A is made negative, but B remains positively charged.

(i) How will the two threads appear? Tick one box.

both still vertical ☐

further apart at the bottom ☐

closer together at the bottom ☐

(ii) Explain your answer to **(b)(i)**.

.....

.....

[2]

© UCLES 2013
www.root19.com

+91 - 9969 353 391

For Examiner's Use

(c) Ball A remains negatively charged and ball B remains positively charged. A rod with a large positive charge is positioned to the left of A.

State what happens to A and to B.

ball A .....

ball B .....
[2]

[Total: 6]

7 Three methods of transfer of thermal energy are conduction, convection and radiation.

(a) Which one is involved when thermal energy is transferred through a solid?

.....[1]

(b) Which one can occur only in a liquid or a gas?

.....[1]

(c) Which two are impossible in a vacuum?

..... and .....[2]

[Total: 4]

© UCLES 2013
www.root19.com

+91 - 9969 353 301

For Examiner's Use

8 In alphabetical order, some major regions of the electromagnetic spectrum are

gamma,
infra-red,
radio,
ultra-violet,
visible,
X-rays.

(a) List these regions in order of decreasing wavelength. The first one has been filled in for you.

longest wavelength ..... radio

.....

.....

.....

.....

shortest wavelength .....
[2]

(b) Where in this list would you insert microwaves?

..... [1]

(c) A microwave oven is one device that makes use of microwaves.

Explain why the design of microwave ovens must include effective screening, so that microwaves do not escape.

.....

.....

..... [1]

(d) Suggest one other use for microwaves.

..... [1]

[Total: 5]

© UCLES 2013
www.root19.com

+91 - 9969 353 391

For Examiner's Use

9 A 6.0 V battery is connected as shown in the circuit of Fig. 9.1.

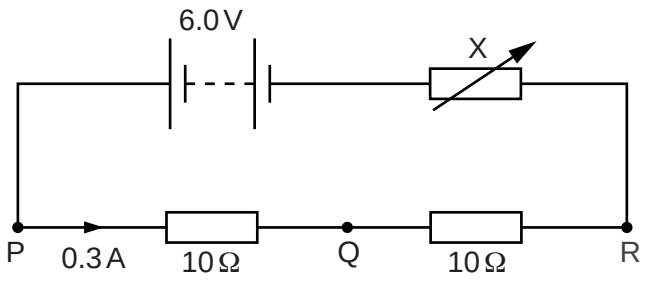

Fig. 9.1

(a) The current to the right of point P is 0.3 A.

An ammeter is inserted into the circuit.

What value will the ammeter show when it is inserted

(i) at Q, ...

(ii) at R? .....
[2]

(b) Calculate the potential difference (p.d.) across one of the 10 Ω resistors.

potential difference = ... V [3]

(c) **(i)** State the name of the component labelled X.

.....[1]

(ii) Deduce the value of the resistance of X when the 6.0 V battery is supplying 0.3 A to the circuit.

resistance = ... Ω [1]

(iii) What happens to the current in the circuit when the resistance of X is increased?

.....[1]

[Total: 8]

© UCLES 2013
www.root19.com

+91 - 9969 353 091

For Examiner's Use

10 **(a)** Fig. 10.1 shows a light-dependent resistor (LDR) connected with a 1000 Ω resistor to form a potential divider.

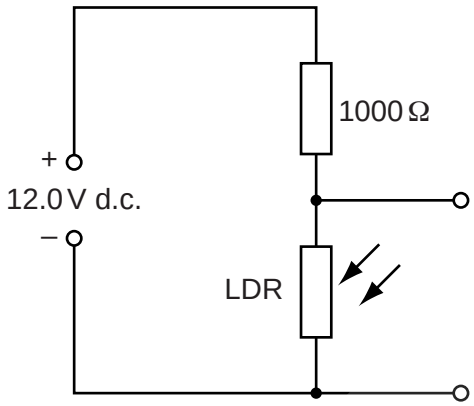

Fig. 10.1

- In daylight, the LDR has a resistance much lower than 1000 Ω.
- In the dark, the LDR has a resistance much higher than 1000 Ω.

(i) What is the potential difference across the LDR when it is dark? Tick one box.

0 V	☐
greater than 0 V but less than 6.0 V	☐
exactly 6.0 V	☐
greater than 6.0 V but less than 12.0 V	☐
12.0 V	☐

(ii) Explain your answer to **(a)(i)**.

.....

.....

[3]

© UCLES 2013
www.root19.com

+91 - 9969 353 391

For Examiner's Use

(b) Fig. 10.2 shows the potential divider of Fig. 10.1 connected to a relay and a lamp.

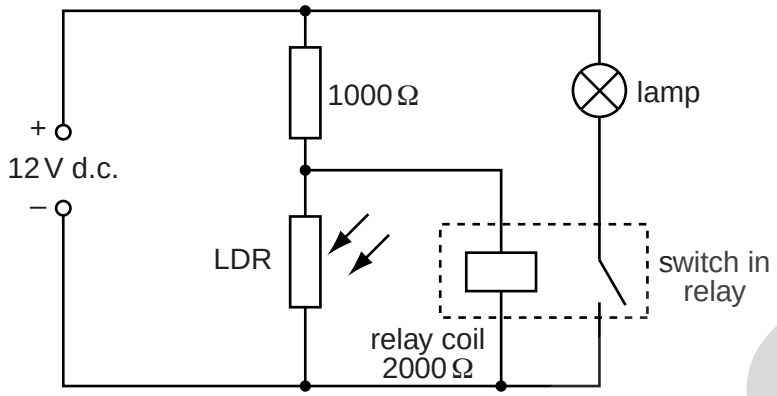

Fig. 10.2

In order to close the switch in the relay, there must be at least 6.0 V across the relay coil.

(i) At a certain time, the potential difference across the relay coil is greater than 6.0 V.

Describe how this potential difference causes the switch to close.

.....

.....

.....

..... [3]

(ii) What happens to the lamp when the switch in the relay is closed?

..... [1]

(c) **(i)** The circuit of Fig. 10.2 is positioned in a laboratory.
Use your answers to **(a)** and **(b)** to deduce the condition in the laboratory that will cause the lamp to glow. Complete the sentence below.

The lamp will glow when .....

..... [1]

(ii) A similar circuit in the laboratory has a thermistor instead of the LDR.
Which one of the following will cause this circuit to switch the lamp on or off? Tick one box.

change in temperature ☐

change in light level ☐

change in sound level ☐

change in air pressure ☐

change in background radiation ☐ [1]

[Total: 9]

© UCLES 2013
www.root19.com

+91 - 9969 353 301

For Examiner's Use

11 **(a)** Fig. 11.1 shows an arrangement to monitor the level of the fuel in the tank of a car.

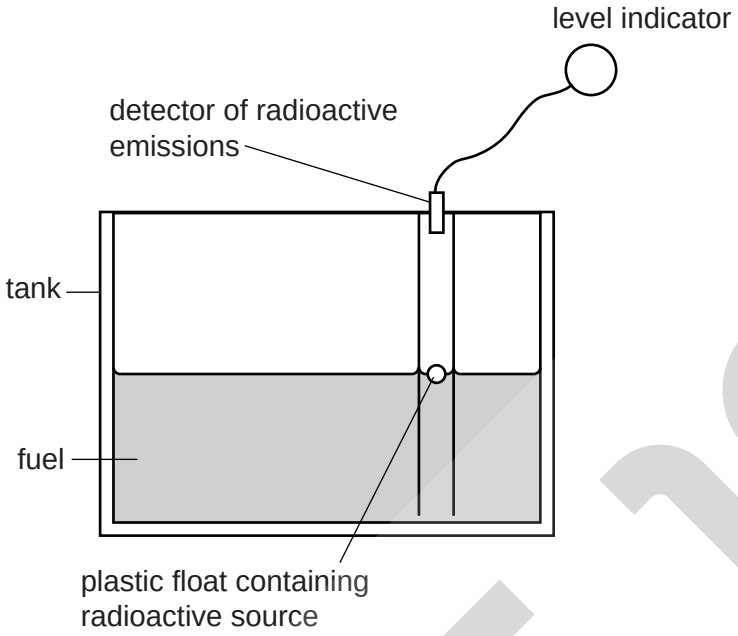

Fig. 11.1

(i) Suggest why the radioactive source in the float is unlikely to be an α-particle emitter.

.....

..... [1]

(ii) Explain why the detector gives different readings for different fuel levels.

.....

.....

..... [1]

(iii) Comment on the value of the half-life of the radioactive source used in the float.

.....

..... [1]

www.root19.com +91 - 9969 353 391

For Examiner's Use

(b) Radium-226 ($^{226}_{88}Ra$) decays according to the equation below, emitting a particle X.

$$^{226}_{88}Ra \longrightarrow {}^{222}_{86}Rn + \text{particle X}$$

(i) How many protons are there in a nucleus of radium-226?

..... [1]

(ii) How many neutrons are there in a nucleus of radium-226?

..... [2]

(iii) From the equation, deduce the nature of particle X.

Particle X is ..... . [2]

[Total: 8]

© UCLES 2013
www.root19.com

+91 - 9969 353 301

For Examiner's Use

12 Fig. 12.1 shows a simple transformer.

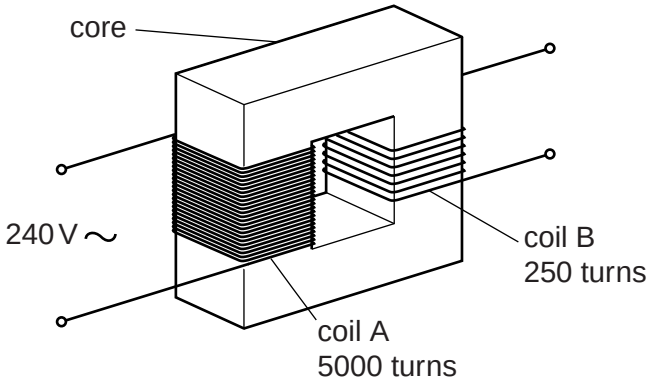

Fig. 12.1

Coil A has 5000 turns and coil B has 250 turns.

(a) Name a suitable material for

(i) the core, ...

(ii) the coils. .....
[2]

(b) Coil A is connected to a 240 V alternating voltage.

Calculate the output voltage across coil B.

output voltage = ... V [3]

(c) Three lamps each require a voltage equal to the output voltage of coil B in order to operate at full brightness.

On Fig. 12.1, show these three lamps, suitably connected to run at full brightness. Use the standard circuit symbol for each lamp. [2]

[Total: 7]

Permission to reproduce items where third-party owned material protected by copyright is included has been sought and cleared where possible. Every reasonable effort has been made by the publisher (UCLES) to trace copyright holders, but if any items requiring clearance have unwittingly been included, the publisher will be pleased to make amends at the earliest possible opportunity.

University of Cambridge International Examinations is part of the Cambridge Assessment Group. Cambridge Assessment is the brand name of University of Cambridge Local Examinations Syndicate (UCLES), which is itself a department of the University of Cambridge.

www.root19.com +91 - 9969 353 391